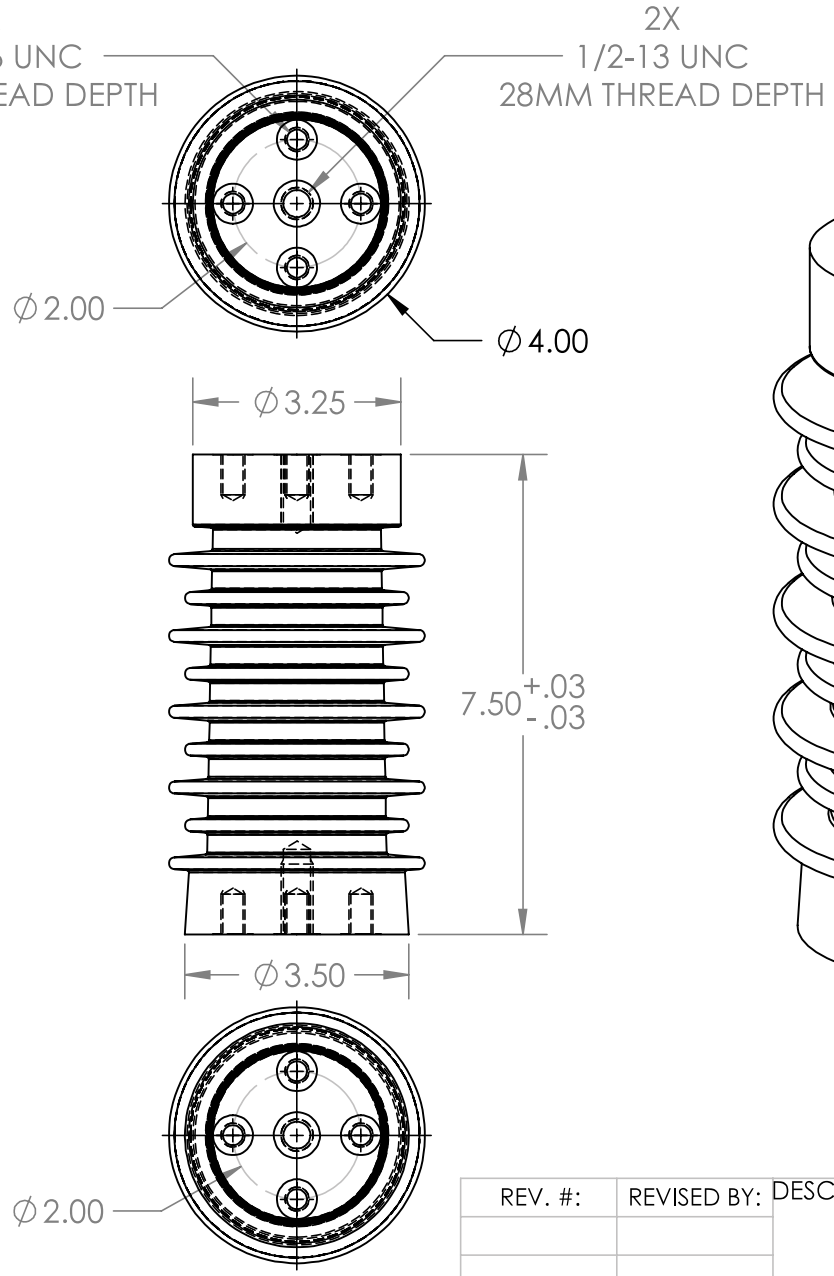

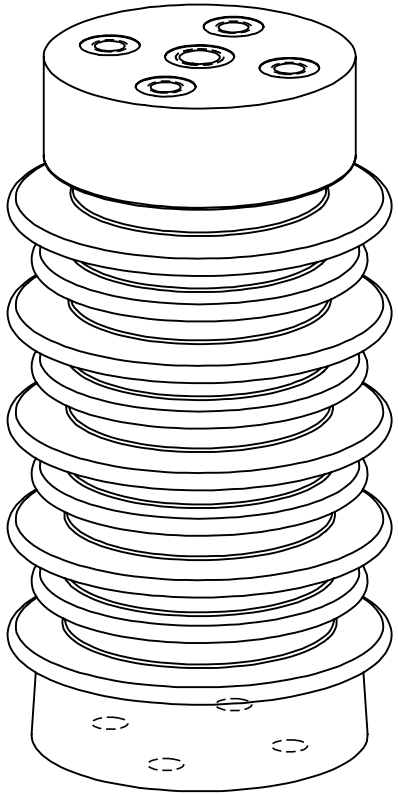

TECHNICAL REQUIREMENTS:	
CATILEVER STRENGTH	1000# [4.6KN]
TENSILE STRENGTH	3000# [13.7KN]
TORSION STRENGTH	3500# [0.41KN.M]
COMPRESSION STRENGTH	20000# [91KN]
NEMA VOLTAGE RATING	14.4KV
60HERTZ WITHSTAND-DRY	50KV
60 HERTZ WITHSTAND-DEW	30KV
IMPULSE WITHSTAND	110KV
APPLICABLE STANDARD	ANSI C29.10-1989

REV. #:	REVISED BY:

DESCRIPTION:

INDOOR BUS SUPPORT

MV POWER
Medium Voltage Solutions

MV POWER LLC
2811 Hastings Road
Erie, PA 16506
Tel: 814-520-6385
Email: info@mvpower.us
Web: www.mvpower.us

PROPRIETARY AND CONFIDENTIAL

THE INFORMATION CONTAINED IN THIS DRAWING IS THE SOLE PROPERTY OF MEISTER INTL. ANY REPRODUCTION IN PART OR AS A WHOLEWITHOUT THE WRITTEN PERMISSION OF MEISTER INTL. IS PROHIBITED.

MATERIAL: CYCLOALIPHATIC EPOXY

FINISH:

DO NOT SCALE DRAWING

SIZE: A

PART NO.: A20-4-OC

REV:

SCALE: NTS

WEIGHT:

SHEET 1 OF 1